TRUSTED FOR OVER
100 YEARS

Sunbeam®

SAP8242/B-CN
SAP8412/B-CN

Aer1™ Total Air Filter Air Purifier

with Optional Ionizer

aer1™
filter series

Instruction Leaflet

PLEASE READ AND SAVE THESE IMPORTANT INSTRUCTIONS

PLEASE READ AND SAVE THESE IMPORTANT SAFETY INSTRUCTIONS

When using electrical appliances, basic safety precautions should always be followed to reduce the risk of fire, electric shock, and injury to persons. These precautions include:

1. Read all instructions before using the appliance.
2. To avoid fire or shock hazard, plug the appliance directly into a 120V AC electrical outlet.
3. If the filter is covered by a bag when shipped, remove plastic bag before use.
4. Keep the cord out of heavy traffic areas. To avoid fire hazard, NEVER put the cord under rugs, near heat registers, radiators, stoves, or heaters.
5. To protect against electrical hazards, DO NOT immerse the appliance in water or other liquids. Do not use near water.
6. Close supervision is necessary when any appliance is used by or near children, or disabled persons.
7. Always unplug the air purifier before moving or cleaning the unit, opening the grill, changing the filters and whenever the unit is not in use. To disconnect the unit, be sure to pull the plug and not the cord.
8. NEVER drop or insert any objects into the openings of the unit.
9. DO NOT operate any appliance with a damaged cord or plug. If the motor fan fails to operate or the unit has been dropped or damaged in any manner, return appliance to manufacturer for examination and/or repair.
10. Use appliance only for intended household use as described in this manual. Any other use not recommended by the manufacturer may cause fire, electric shock, or injury to persons. The use of attachments not recommended or sold by Jarden Consumer Solutions may cause hazards.
11. DO NOT use outdoors. Suitable for Dry Location ONLY.
12. NEVER place on a soft surface such as a bed or sofa as this could cause the unit to tip over and block the air inlet or outlet grills.
13. Keep unit away from heated surfaces and open flames.
14. DO NOT attempt to repair or adjust any electrical or mechanical functions on this unit. Doing so will void your warranty. The inside of the unit contains no user serviceable parts. All servicing should be performed by Jarden Consumer Solutions or an authorized Jarden Consumer Solutions Center.
15. DO NOT place anything on top of unit.
16. NEVER use detergents, gasoline, glass purifier, furniture polish, paint thinner, or other household solvents to clean any part of the appliance.
17. Always turn the appliance off before unplugging it.
18. The ionizer in this appliance produces less ozone than the UL established limits of 50ppb. However, in high concentrations, ozone can be harmful to birds and small pets. To prevent ozone buildup, we suggest using the ionizer in well ventilated areas with the fan on.
19. This appliance should only be used in a room with temperatures between 40° F and 110° F.
20. **WARNING:** To reduce the risk of fire or electric shock, DO NOT use this appliance with any solid-state speed control device.
21. Always ensure that filter(s) are installed in unit before each use.

PLEASE READ AND SAVE THESE IMPORTANT SAFETY INSTRUCTIONS

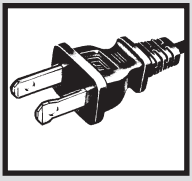

THIS APPLIANCE HAS A POLARIZED PLUG (one blade is wider than the other). To reduce the risk of electric shock, this plug is intended to fit in a polarized outlet only one way. If the plug does not fit fully in the outlet, reverse the plug. If it still does not fit, contact a qualified electrician to install the proper outlet.

DO NOT ATTEMPT TO MODIFY THIS PLUG OR DEFEAT THIS SAFETY FEATURE IN ANY WAY.

FEATURES

CORD SAFETY

- The length of cord used on this appliance was selected to reduce tangling or tripping hazards.
- If a longer cord is necessary, an approved extension cord may be used. The electrical rating of the extension cord must be equal to or greater than the electrical rating of the air purifier (see rating label marked on product).
- Care must be taken to arrange the extension cord so that it will not drape over the countertop or tabletop where it can be pulled on by children or accidentally tripped over.
- If the supply cord is damaged, it must be replaced by the manufacturer, its service agent or similarly qualified persons in order to avoid hazard.

GET TO KNOW YOUR AIR CLEANER

This unit is compatible with all Aer1™ Filters. This allows you to choose the filter that is just right for you. Below is information on each filter:

TOTAL AIR - Advanced Dust Eliminating Technology

ODOR ELIMINATOR - 10x the odor fighting power

ALLERGEN REMOVER - True HEPA technology improves air quality for allergy sufferers

GERM REDUCING - True HEPA PLUS Silver infused germ reducing technology, silver coated filter reduces bacteria and viruses from the air stream.

IONIZER

This appliance has an optional ionizer feature which, when turned on, releases negative ions into outgoing filtered air to help the air purification process.

What Are Ions?

Ions are tiny particles that carry a positive or negative charge. They exist naturally around us: in the air, water, and ground. Both positive and negative ions are colorless, odorless, and harmless.

How Does The Ionizer Work?

Negative ions help air purification by attaching themselves to very small airborne particles in the room. These particles take on a negative charge and may join with positively charged particles such as dust, pollen, smoke, and pet dander to form larger particles. These larger particles are then more easily captured by the filter system.

Important Notes:

Your ionizer may produce an occasional popping or cracking sound. This is normal and occurs when a small buildup of ions is discharged.

After extended use, you may notice dust around the grills or front panel. This is caused by negative ions exiting the air outlet, evidence of the ionizer's air cleaning effectiveness. You can remove the dust with a soft brush or clean, damp cloth.

Larger particles may be attracted to positively charged surfaces throughout the home, like walls or floors.

- This may occur more frequently when the filter is nearing the end of its useful product life and unable to capture as many charged particles.
- Excessive amounts of pet dander, dust, or smoke may decrease the life expectancy of the filter and interfere with the ionization process.

To help prevent particles from attracting to surfaces throughout your home:

- You may want to run the ionizer less often.
- Check the condition of the filter more frequently.

CAUTION: The ionizer in this appliance produces less ozone than the UL* established limits of 50ppb. However, in high concentrations, ozone can be harmful to birds and small pets. To prevent ozone buildup, we suggest using the ionizer in well ventilated areas with the air purifier fan on.

IMPORTANT: Always check the condition of the Aer1™ filter at the recommended intervals and replace filter if necessary (See FILTER REPLACEMENT INSTRUCTIONS). Using the ionizer with dirty filters may result in dirty particles exiting the air purifier and attracting to walls, carpets, furniture, or other household objects. These dirty particles may prove difficult to remove.

*Tested and listed by the Underwriters Laboratories, Inc.

HIGH, MEDIUM AND LOW SPEED SETTINGS

For optimum air filtration, operate your Sunbeam® air purifier continuously on the MEDIUM (2) setting. Its rugged motor has been designed to give many years of use. For quieter operation (such as in a bedroom), select the LOW (1) setting. When high levels of air pollution are present, select the HIGH (3) setting to quickly circulate and filter the room air.

FILTER CHECK INDICATOR

Your Air Cleaner includes Aer1™ Total Air Filter, specially designed to deliver cleaner air allowing you to dust less often!! The Aer1™ Total Air Filter last 4 months. See back panel for other filter options.

The Filter Check Indicator is designed to remind you to check and change your filter every 4 months. To reset the Filter Check Indicator, press and hold the Filter Reset button (✓) for 3 seconds only under working mode. The Indicator light will blink three times and turn off.

BEFORE USE

1. Carefully unpack your Air Purifier. Select a firm level place where there are no obstructions to the air inlet or filtered air outlet.
2. Access your Aer1™ Filter. If the filter is covered by bag when shipped, remove plastic bag before use and place filter into unit. (Reference **FILTER REPLACEMENT INSTRUCTIONS**).

OPERATING INSTRUCTIONS

IMPORTANT:

- Remove all plastic bags from filters before use.
- DO NOT POINT FILTERED AIR OUTLET TOWARDS WALL.

1. Plug into a 120V AC electrical outlet. The Filter Check Indicator light will blink three times to indicate that the feature has been activated.
2. Select the desired operating speed; HI (3), MEDIUM (2), LOW (1), by turning Speed Control Knob to the appropriate setting. For optimum air filtration, it is recommended to operate the air purifier continuously. Its rugged motor has been designed to give many years of use.
3. To release negative ions into the filtered air, press the ionizer button (✕) to ON and the outer ring of the button will illuminate in blue.
   NOTE: The ionizer will not work unless the unit is running.

Fig. 1

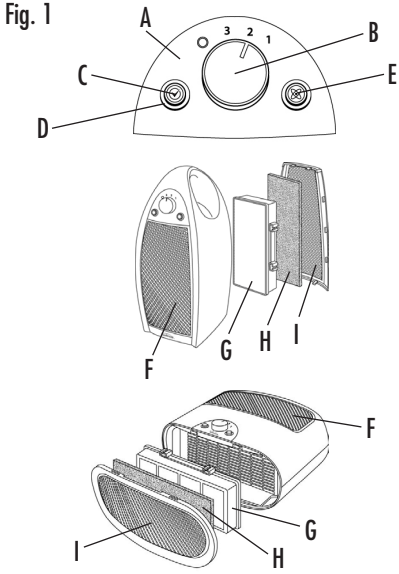

A. Control Panel
B. Speed Control Knob
C. Filter Reset Button
D. Filter Check Indicator Light
E. Ionizer Button
F. Filtered Air Outlet
G. Aer1™ Filter
H. Washable Foam Pre-Filter
I. Air Inlet Grill

CLEANING/MAINTENANCE
FILTER REPLACEMENT

CLEANING/MAINTENANCE INSTRUCTIONS

1. Turn the air purifier off and unplug it before cleaning.
2. The outside of the air purifier can be cleaned with a soft, clean dampened cloth.
3. The air inlet grill (reference Figure 1) can be removed and washed in warm soapy water (not dishwasher safe). Dry before replacing in the unit.
4. The filtered air outlet can be cleaned of dust with a small, soft brush.
5. If you wish to clean the inside of the air purifier, please only use a dry, soft cloth to wipe it down. DO NOT WASH the Aer1™ filter. The Pre-filter (H) can be washed by using a mild dish soap and water. Rinse thoroughly. Allow to air dry completely prior to reinstalling into the Air Inlet Grill (I).
6. NEVER use detergents, gasoline, glass cleaner, furniture polish, paint thinner or other household solvents to clean any part of the air cleaner. **WARNING:** Do not allow moisture to come in contact with the main housing of the air purifier.

FILTER REPLACEMENT INSTRUCTIONS

NOTE:

Every few weeks, check the condition of filter. Filter life will vary, depending on air quality and usage (see below). Under normal conditions of continuous use, the Aer1™ Total Air and Odor Filter will last 4 months while the Allergen and Germ Filter will last 12 months.

After approximately 4 months of operation, the Filter Check Indicator Light will illuminate to alert you to service the filter:

- Filters with a 4-month filter life: This Filter Check indicator is to remind you to perform maintenance to wipe your unit clean, wash the foam pre-filter and to replace the Aer1™ filter.
- Filters with a 12 month filter life: This filter Check indicator is to remind you to perform annual maintenance to wipe your unit clean, wash the foam pre-filter and to replace the Aer1™ filter.

To replace your filter:

1. Turn off and unplug the air purifier.
2. Open the air inlet grill and examine the black foam prefilter. Remove any dust or lint, and wash in warm soapy water. Rinse, drip dry, and place back into grill inlet.
3. Remove the Aer1™ filter from the unit by pulling it gently towards you and discard it. DO NOT attempt to clean the old Aer1™ filter.
4. Install the new Aer1™ filter into the unit.This model utilizes a hang tab and filter clips to insure that the filter is properly in place. Before replacing the filter, make sure that the hang tab is securely in place. The clip can only be attached to the tabs on the filter one way. The filter clip should easily slide onto the filter hang tab with only a small amount of pressure. DO NOT use force while attaching the clip to the filter. (Fig. 2)

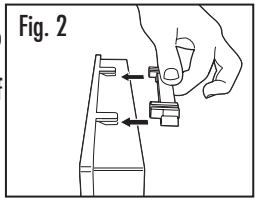
Fig. 2

5. Align the clip on the side of the filter with rails on the inside of the purifier unit. Gently slide the filter onto the rail. (Fig. 3)

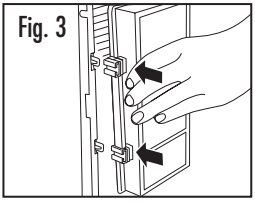
Fig. 3

6. Replace air inlet grill.
7. To reset the Filter Check Indicator, press and hold the Filter Reset Button for 3 seconds. The Indicator light will blink three times and turn off.

FILTER REPLACEMENT TROUBLESHOOTING

Filters can be purchased online at www.bionairecanada.com.

Air Purifier Model Number	Filter Quantity Needed	Compatible with all filter models below	Filter Description
SAP8242-CN/SAP8412-CN/ SAP8242B-CN/SAP8412B-CN	1	BAPF30AT BAPF30AO BAPF350AG BAPF300AH BAPF30 (A filter)	Aer1™ Total Air Filter Aer1™ Odor Filter Aer1™ Germ Filter Aer1™ Allergen Remover Filter Bionaire® "A" Filter

TROUBLESHOOTING	
Problem	**Solution**
• Unit will not operate.	✔ Check if unit is properly plugged in and outlet is energized. ✔ Make sure unit is turned ON. ✔ Make sure filter is properly installed and rear grill is seated correctly.
• Decreased air flow.	✔ Make sure nothing is blocking air inlet and filtered air outlets. ✔ Check condition of the filter and replace if necessary.
• Excessive Noise.	✔ Make sure parts are firmly positioned in place. ✔ Open the air inlet grill and make sure that any plastic packaging was removed from the filter, if applicable.

LEARNING MORE

If you have any questions regarding your product or would like to learn more about other Sunbeam® products, please contact our Consumer Service Department at 1-888-264-9669 or visit our website at www.sunbeam.ca.

WARRANTY INFORMATION

3 YEAR LIMITED WARRANTY

Sunbeam Products, Inc. doing business as Jarden Consumer Solutions or if in Canada, Sunbeam Corporation (Canada) Limited doing business as Jarden Consumer Solutions (collectively "JCS") warrants that for a period of three years from the date of purchase, this product will be free from defects in material and workmanship. JCS, at its option, will repair or replace this product or any component of the product found to be defective during the warranty period. Replacement will be made with a new or remanufactured product or component. If the product is no longer available, replacement may be made with a similar product of equal or greater value. This is your exclusive warranty. Do NOT attempt to repair or adjust any electrical or mechanical functions on this product. Doing so will void this warranty.

This warranty is valid for the original retail purchaser from the date of initial retail purchase and is not transferable. Keep the original sales receipt. Proof of purchase is required to obtain warranty performance. JCS dealers, service centers, or retail stores selling JCS products do not have the right to alter, modify or any way change the terms and conditions of this warranty.

This warranty does not cover normal wear of parts or damage resulting from any of the following: negligent use or misuse of the product, use on improper voltage or current, use contrary to the operating instructions, disassembly, repair or alteration by anyone other than JCS or an authorized JCS service center. Further, the warranty does not cover: Acts of God, such as fire, flood, hurricanes and tornadoes.

What are the limits on JCS's Liability?

JCS shall not be liable for any incidental or consequential damages caused by the breach of any express, implied or statutory warranty or condition.

Except to the extent prohibited by applicable law, any implied warranty or condition of merchantability or fitness for a particular purpose is limited in duration to the duration of the above warranty.

JCS disclaims all other warranties, conditions or representations, express, implied, statutory or otherwise.

JCS shall not be liable for any damages of any kind resulting from the purchase, use or misuse of, or inability to use the product including incidental, special, consequential or similar damages or loss of profits, or for any breach of contract, fundamental or otherwise, or for any claim brought against purchaser by any other party.

Some provinces, states or jurisdictions do not allow the exclusion or limitation of incidental or consequential damages or limitations on how long an implied warranty lasts, so the above limitations or exclusion may not apply to you.

This warranty gives you specific legal rights, and you may also have other rights that vary from province to province, state to state or jurisdiction to jurisdiction.

How to Obtain Warranty Service

In the U.S.A.

If you have any question regarding this warranty or would like to obtain warranty service, please call 1-888-264-9669 and a convenient service center address will be provided to you.

In Canada

If you have any question regarding this warranty or would like to obtain warranty service, please call 1-888-264-9669 and a convenient service center address will be provided to you.

In the U.S.A., this warranty is offered by Sunbeam Products, Inc. doing business as Jarden Consumer Solutions located in Boca Raton, Florida 33431. In Canada, this warranty is offered by Sunbeam Corporation (Canada) Limited doing business as Jarden Consumer Solutions, located at 20 B Hereford Street, Brampton, Ontario L6Y 0M1. If you have any other problem or claim in connection with this product, please write our Consumer Service Department. **PLEASE DO NOT RETURN THIS PRODUCT TO ANY OF THESE ADDRESSES OR TO THE PLACE OF PURCHASE.**

AER1™ FILTER SERIES

Congratulations! Your new air cleaner is equipped with the new and improved Aer1™ Total Air Filter.

Filter Type	Technology	Consumer Benefit
THIS UNIT COMES WITH Total Air	99% HEPA-Type technology. Infused with Arm & Hammer® baking soda. Infused with silver technology.	Ideal for dust reduction. Delivers 30% better air quality.
Odor Eliminator	10 times the odor fighting power. Contains Arm & Hammer® baking soda, carbon and zeolite for odor control.	Ideal for eliminating odors from pets, tobacco smoke and cooking fumes.
Allergen Remover	99.97% True HEPA technology. Removes up to 99.97% of particales passing through the filter such as pollen, dust, mold and dander.	Ideal for allergy sufferers.
Germ Fighter with Allergen Remover	99.97% True HEPA technology. Infused with silver technology.	Helps reduce viruses and bacteria as well as ideal for allergy sufferers.

aer 1™
filter series

© 2012 Sunbeam Products, Inc. doing business as Jarden Consumer Solutions. All rights reserved. Imported and distributed by Sunbeam Corporation (Canada) Limited doing business as Jarden Consumer Solutions, 20B Hereford Street, Brampton, Ontario L6Y 0M1.
The ARM & HAMMER® name, logo and associated marks are trademarks of Church & Dwight Co., Inc. and are used under license by Sunbeam Products, Inc.

Printed In China